SINGLE TIMER

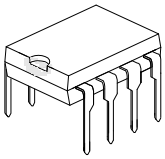

DIP-8

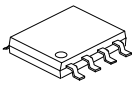

SOP-8

MSOP-8

■ DESCRIPTION

The **C555** astable and monostable timing circuit is a highly stable controller capable of producing accurate time delays, or oscillation.

■ FEATURES

* Timing from microseconds through hours
* High speed operation – 500kHz
* Wide operation supply voltage range – 7 to 15 voltages
* Low Supply Current
* Operates in both astable and monostable modes
* High output source/sink driver can drive TTL / CMOS
* Adjustable duty cycle

■ ORDERING INFORMATION

Ordering Number		Package	Packing
Lead Free	Halogen Free		
C555L-D08-T	C555G-D08-T	DIP-8	Tube
C555L-S08-R	C555G-S08-R	SOP-8	Tape Reel
C555L-SM1-R	C555G-SM1-R	MSOP-8	Tape Reel

C555G-D08-T (1)Packing Type (2)Package Type (3)Green Package	(1) T: Tube, R: Tape Reel (2) D08: DIP-8, S08: SOP-8, SM1: MSOP-8 (3) G: Halogen Free and Lead Free, L: Lead Free

■ MARKING

DIP-8	SOP-8 / MSOP-8
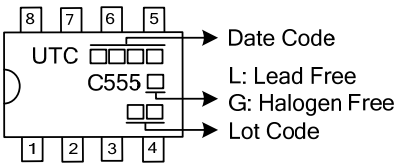	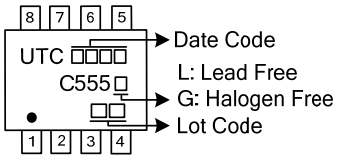

Copyright © 2025 Unisonic Technologies Co., Ltd

■ PIN CONFIGURATION

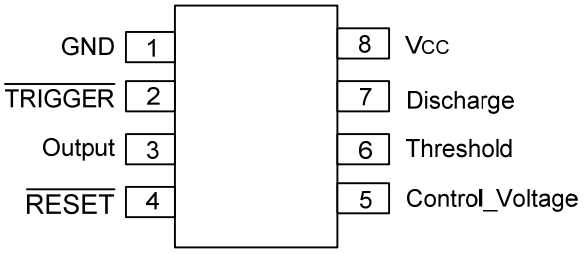

■ PIN DESCRIPTION

PIN No.	PIN NAME	DESCRIPTION
1	GND	Ground
2	$\overline{\text{TRIGGER}}$	Trigger voltage input
3	Output	Output
4	$\overline{\text{RESET}}$	Direct reset low input
5	Control_Voltage	Control voltage
6	Threshold	Threshold voltage input
7	Discharge	Discharging when output is low
8	V_{CC}	Supply voltage

■ TRUTH TABLE

THRESHOLD	$\overline{\text{TRIGGER}}$	$\overline{\text{RESET}}$	OUTPUT	DISCHARGE
X	X	L	L	ON
$>2/3\times V_{CC}$	$>1/3\times V_{CC}$	H	L	ON
$<2/3\times V_{CC}$	$>1/3\times V_{CC}$	H	STABLE	STABLE
X	$<1/3\times V_{CC}$	H	H	OFF

■ BLOCK DIAGRAM

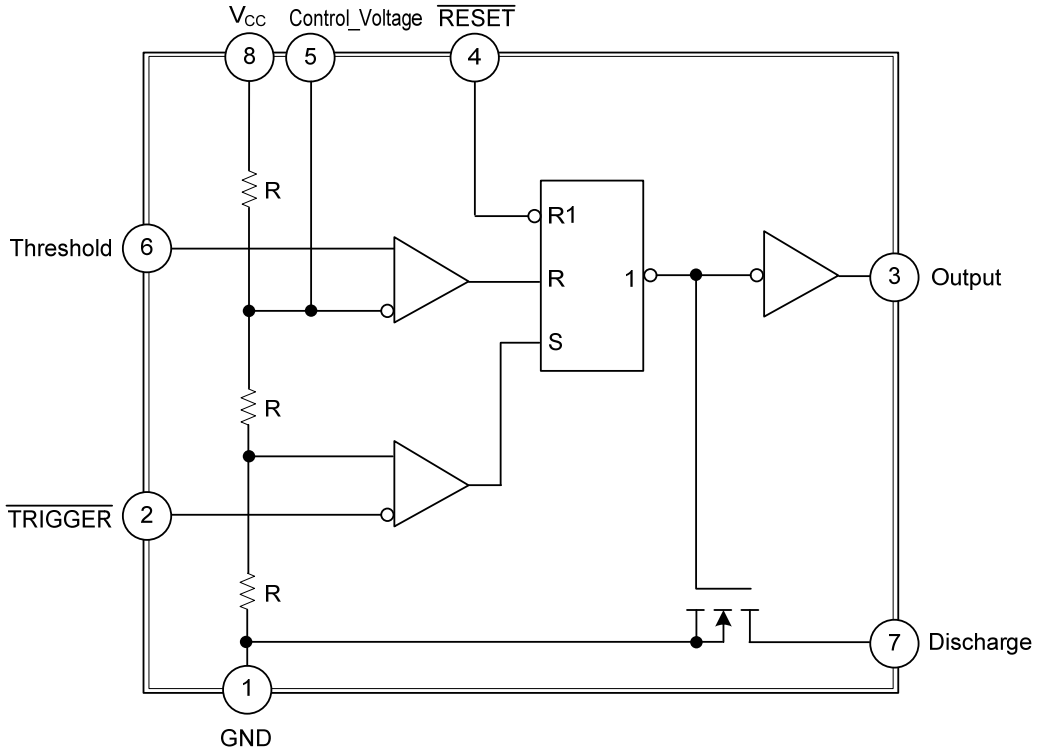

■ ABSOLUTE MAXIMUM RATINGS

PARAMETER		SYMBOL	RATINGS	UNIT
Supply Voltage		V_{CC}	16	V
Input Voltage		V_{TH}, V_{TRIG}, V_{RST}	-0.3 ~ V_{CC}+0.3	V
Output Current		I_O	100	mA
Power Dissipation	DIP-8	P_D	600	mW
	SOP-8		400	mW
	MSOP-8		300	mW
Junction Temperature		T_J	+125	°C
Storage Temperature		T_{STG}	-65 ~ +150	°C

Note: Absolute maximum ratings and operation rating recommended are those values beyond which the device could be permanently damaged. Absolute maximum ratings are stress ratings only and functional device operation is not implied.

■ RECOMMENDED OPERATING CONDITIONS

PARAMETER	SYMBOL	RATINGS	UNIT
Supply Voltage	V_{CC}	7 ~ 15	V
Output Current	I_O	20	mA
Operating Temperature	T_A	-20 ~ +85	°C

■ ELECTRICAL CHARACTERISTICS (unless otherwise specified)

PARAMETER	SYMBOL	TEST CONDITIONS	MIN	TYP	MAX	UNIT
T_A=25°C						
Supply Current	I_{CC}	V_{CC}=7V			400	μA
		V_{CC}=15V			600	μA
Initial Accuracy	A_{CCUR}	R_L=1~100kΩ, C_L=0.1μF	5			%
Drift with Supply Voltage	$\Delta t/\Delta V_{CC}$	V_{CC}=7V, R_L=1~100kΩ, C_L=0.1μF			3	%/C
Control Voltage	V_C		0.4×V_{CC}		0.75×V_{CC}	V
Threshold Voltage	V_{TH}	V_{CC}=7V~15V	0.4×V_{CC}		0.70×V_{CC}	V
Trigger Voltage	V_{TR}	V_{CC}=7V~15V	0.28×V_{CC}		0.36×V_{CC}	V
Reset Voltage	V_{RST}	V_{CC}=7V~15V	0.4		2.0	V
Low-Level Output Voltage	V_{OL}	V_{CC}=7V, I_{OL}=3.2 mA			0.4	V
		V_{CC}=15V, I_{OL}=20mA			1.0	V
High-Level Output Voltage	V_{OH}	V_{CC}=7V, I_{OH}=-0.8mA	6.0			V
		V_{CC}=15V, I_{OH}=-0.8mA	14.3			V
Rise/Fall Time of Output	t_{THL}, t_{TLH},	V_{CC}=15V, R_L=10MΩ, C_L=10pF			75	ns
Guaranteed Max Osc Freq	f_{MAX}	V_{CC}=7V~15V, Astable Operation	500			kHz

■ ELECTRICAL CHARACTERISTICS (Cont.)

PARAMETER	SYMBOL	TEST CONDITIONS		MIN	TYP	MAX	UNIT
T_A=-20°C ~+85°C							
Supply Current	I_{CC}	V_{CC}=7V				550	μA
		V_{CC}=15V				900	μA
Initial Accuracy	A_{CCUR}	R_L=1~100kΩ, C_L=0.1μF		5			%
Drift with Temperature	Δt/ΔT	R_L=1~100kΩ, C_L=0.1μF	V_{CC}=7V		0.02		%/°C
			V_{CC}=15V		0.06		%/°C
Drift with Supply Voltage	$\Delta t/\Delta V_{CC}$		V_{CC}=7V			6	%/C
Control Voltage	V_C			0.35×V_{CC}		0.80×V_{CC}	V
Threshold Voltage	V_{TH}	V_{CC}=7V~15V		0.35×V_{CC}		0.80×V_{CC}	V
Trigger Voltage	V_{TR}	V_{CC}=7V~15V		0.25×V_{CC}		0.40×V_{CC}	V
Reset Voltage	V_{RST}	V_{CC}=7V~15V		0.2		2.0	V
Low-Level Output Voltage	V_{OL}	V_{CC}=7V, I_{OL}=3.2mA				0.6	V
		V_{CC}=15V, I_{OL}=20mA				1.5	V
High-Level Output Voltage	V_{OH}	V_{CC}=7V, I_{OH}=-0.8mA		5.5			V
		V_{CC}=15V, I_{OH}=-0.8mA		14			V
Rise/Fall Time of Output	t_{THL}, t_{TLH},	V_{CC}=15V, R_L=10MΩ, C_L=10pF				150	ns
Guaranteed Max Osc Freq	f_{MAX}	V_{CC}=7V~15V, Astable Operation		200			kHz

■ TYPICAL APPLICATION CIRCUIT

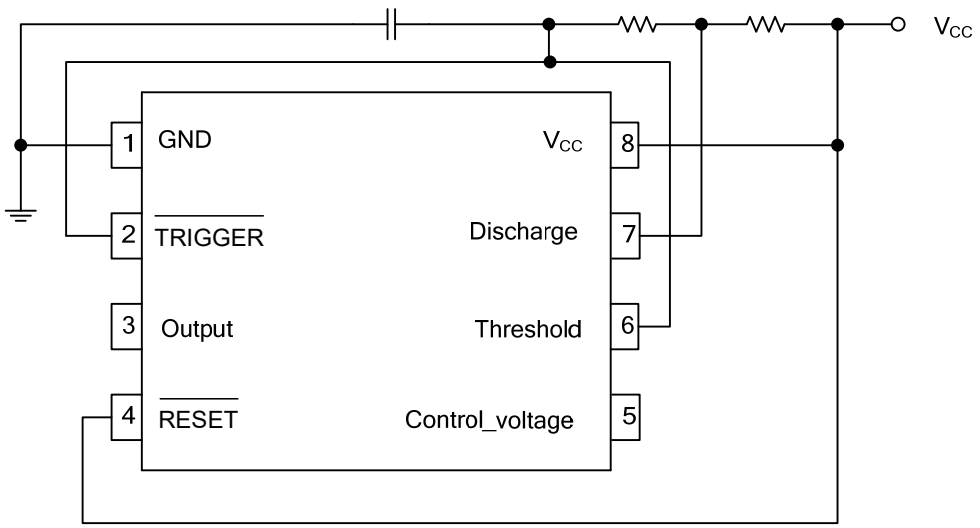

■ SWITCHING WAVEFORMS

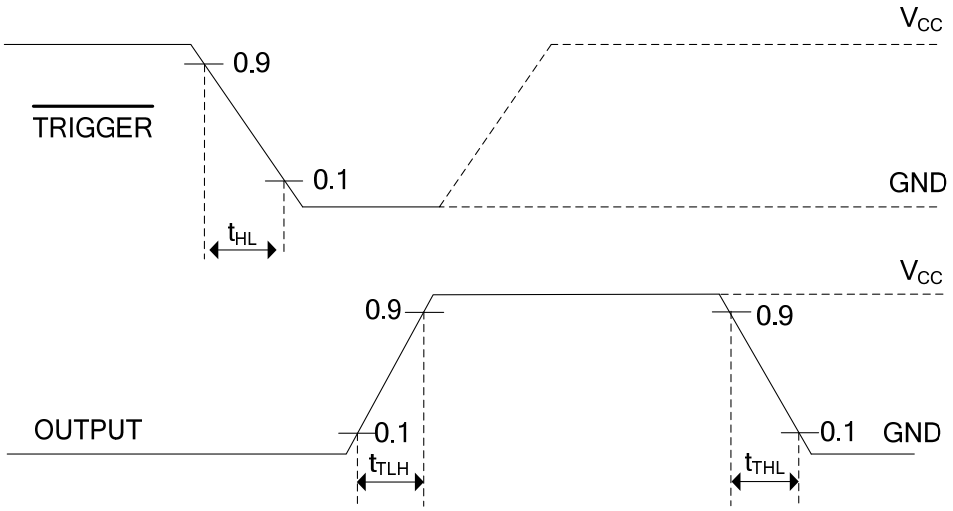

UTC assumes no responsibility for equipment failures that result from using products at values that exceed, even momentarily, rated values (such as maximum ratings, operating condition ranges, or other parameters) listed in products specifications of any and all UTC products described or contained herein. UTC products are not designed for use in life support appliances, devices or systems where malfunction of these products can be reasonably expected to result in personal injury. Reproduction in whole or in part is prohibited without the prior written consent of the copyright owner. UTC reserves the right to make changes to information published in this document, including without limitation specifications and product descriptions, at any time and without notice. This document supersedes and replaces all information supplied prior to the publication hereof.